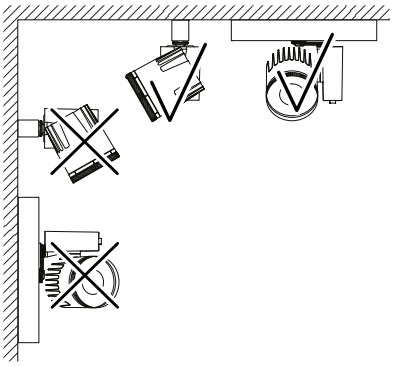

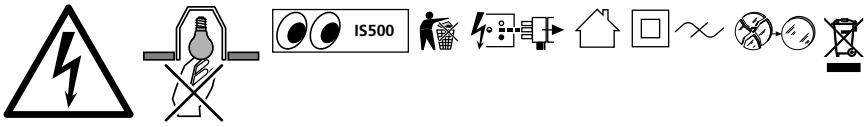

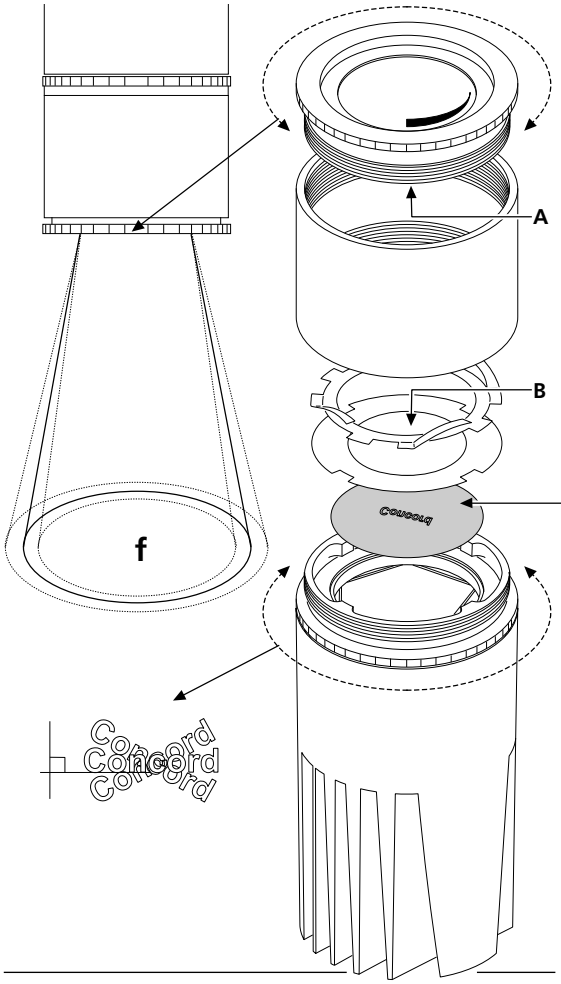

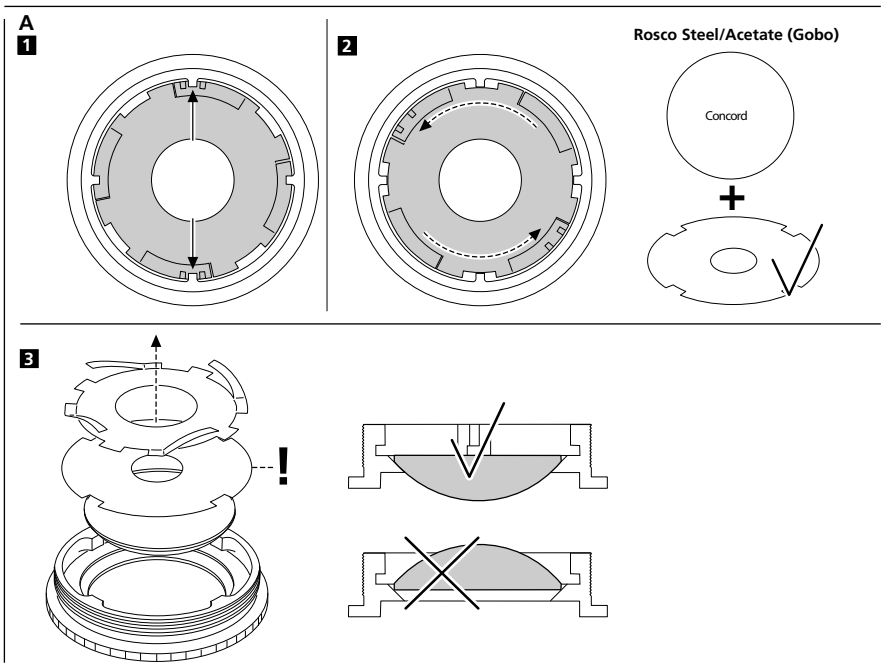

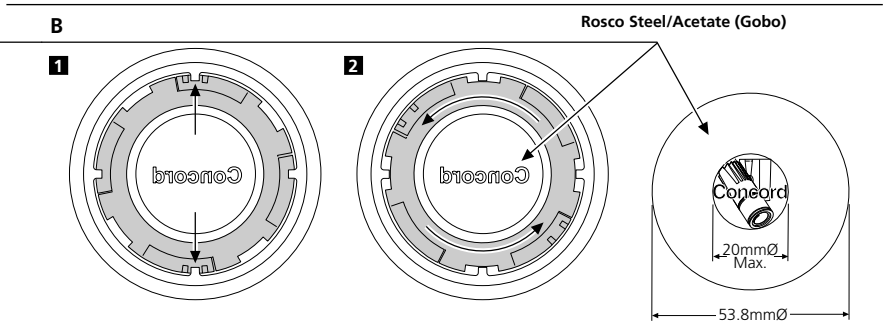

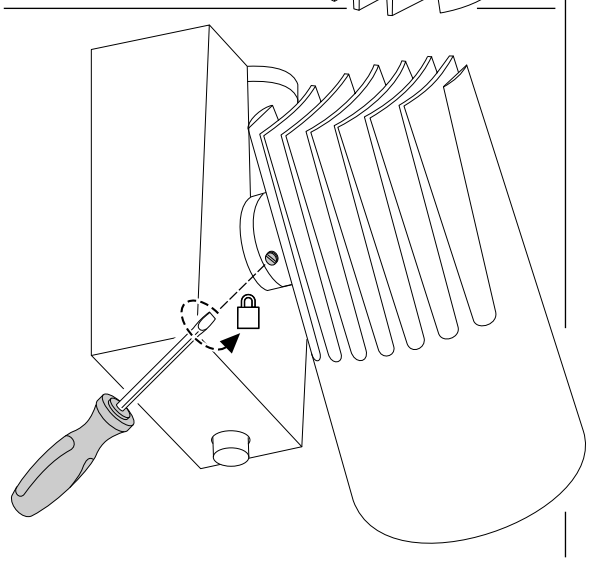

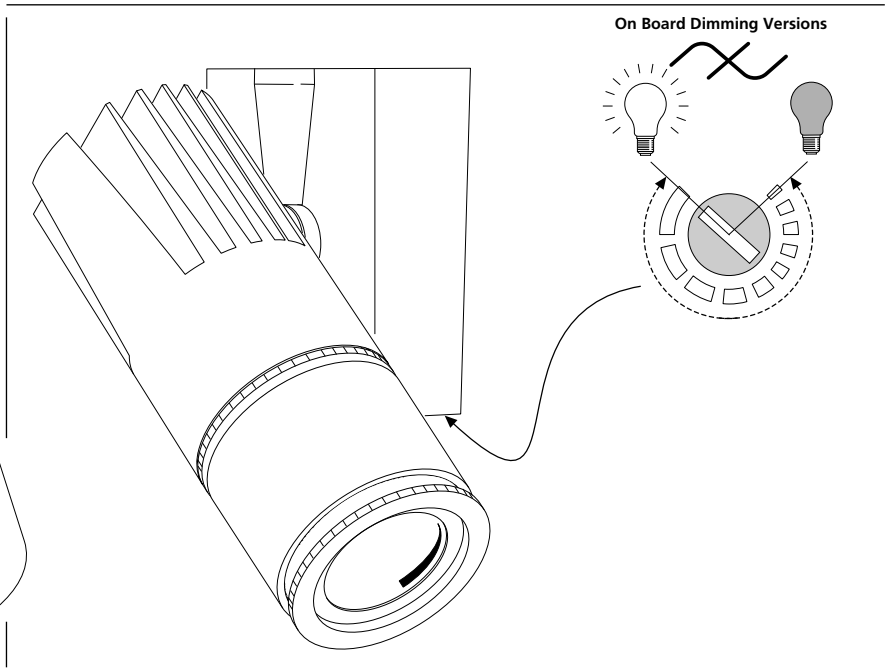

Concord by SYLVANIA

© Feilo Sylvania Europe Limited 09.21